LEDA
KRX0007

1 REMOVAL OF PANELS

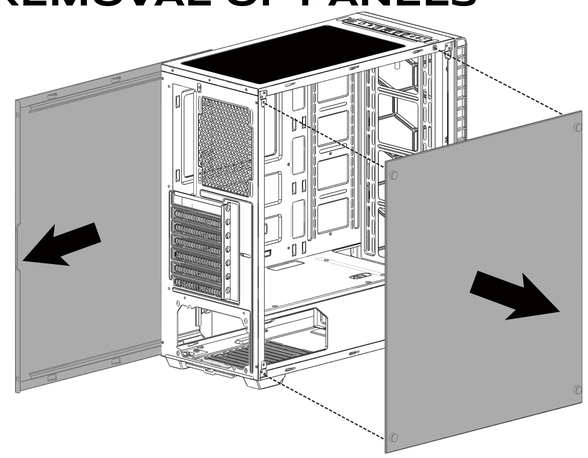

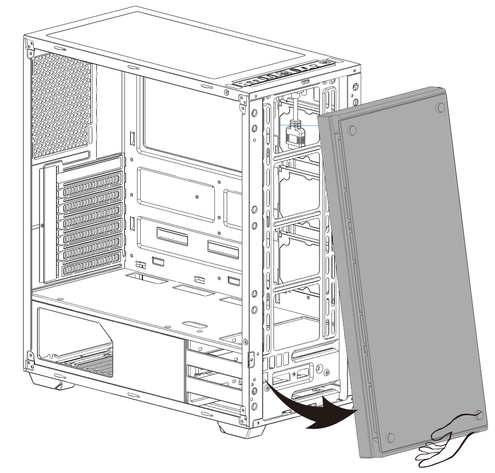

ACCESSORY PACKET CONTENTS:

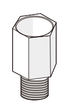 ×6	×1	×4	×3
×4	×12	×2	×4
×3	×1		

CASE FEATURES

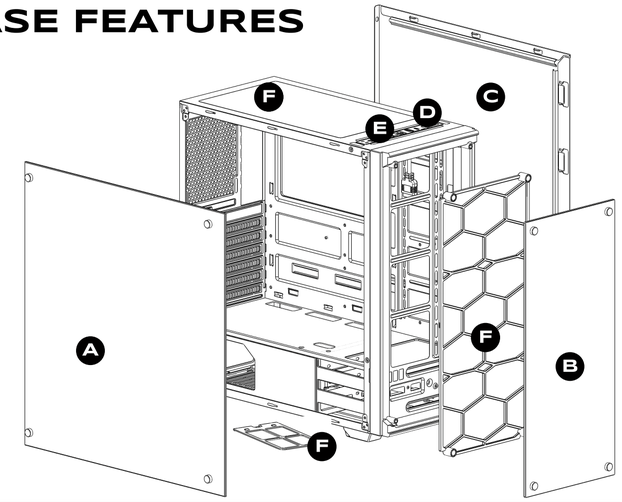

A - SIDE TEMPERED GLASS PANEL
B - FRONT TEMPERED GLASS PANEL
C - SIDE PANEL
D - POWER + RESET BUTTON
E - 1 USB 3.0, 2X USB 2.0, HD AUDIO
F - DUST FILTERS

2 MOTHERBOARD INSTALLATION

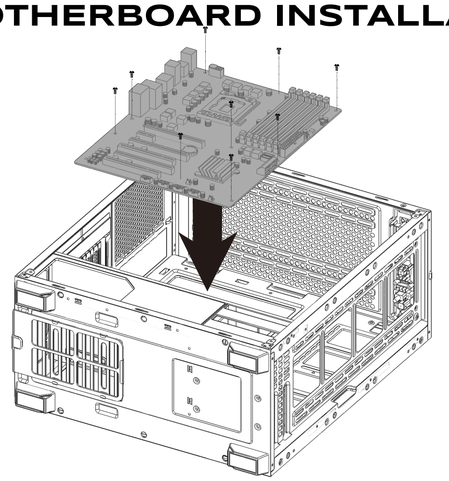

3 ADD-ON CARD INSTALLATION

1 - BEND ADD-ON CARD COVER
2 - SLIDE PCI-E CARD INTO POSITION
3 - SECURE PCI-E CARD WITH ADD-ON SCREW

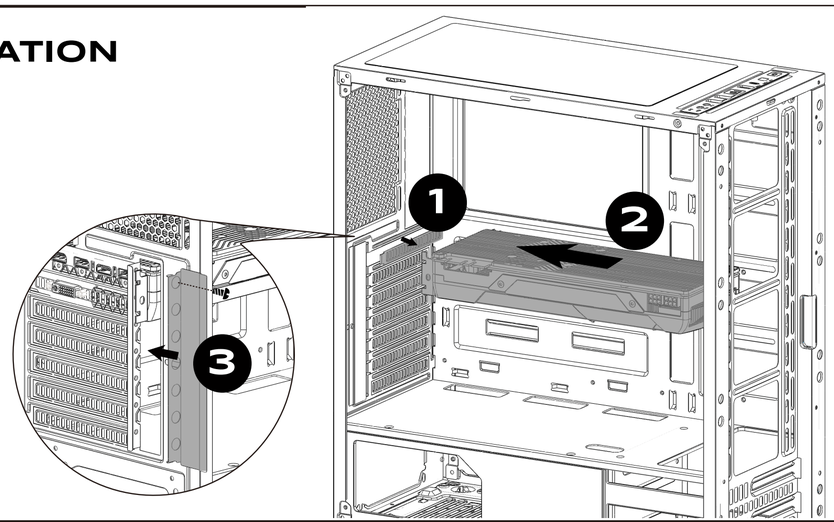

4 POWER SUPPLY INSTALLATION

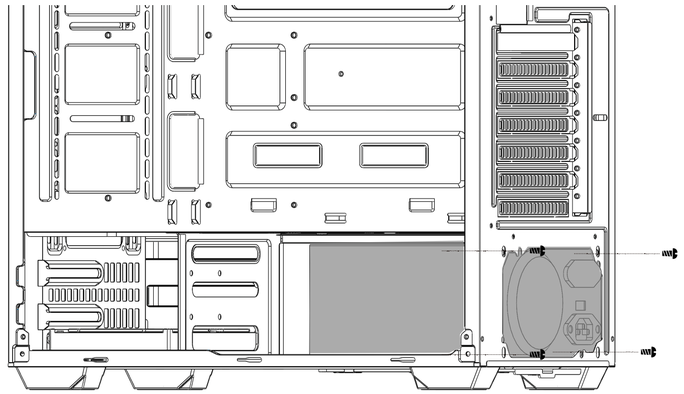

5 3,5' HDD INSTALLATION

1 - REMOVE FRONT FAN BY UNSCREVING THE FAN SCREWS
2 - SLIDE 3,5" DRIVE INTO THE BAY
3 - SECURE WITH SCREWS ON BOTH SIDES

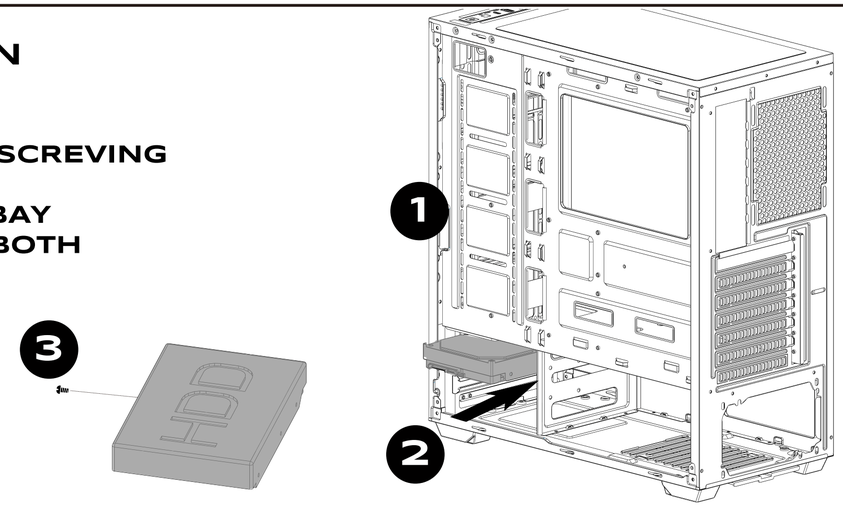

6 2,5' SSD INSTALLATION

1 - PLACE 2,5" DRIVE IN
2 - SECURE WITH SCREWS

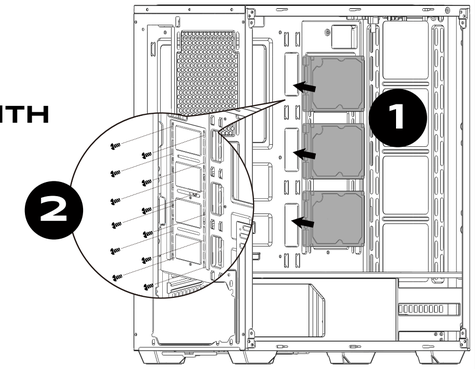

7 FRONT/REAR FAN INSTALLATION

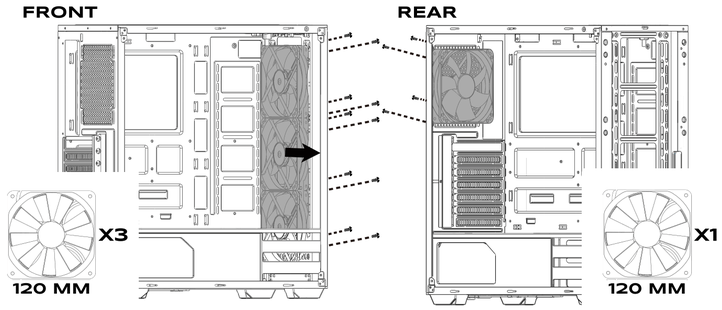

8 TOP FAN INSTALLATION

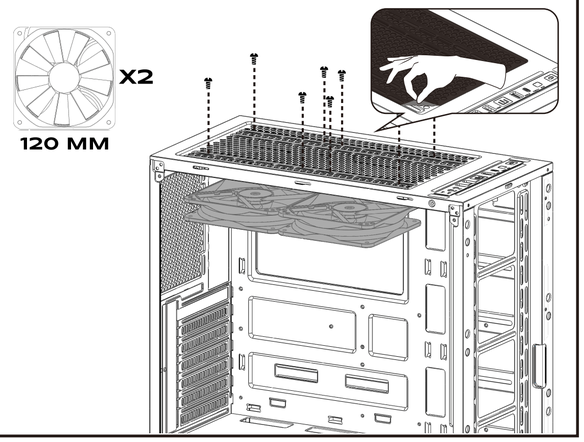

9 WATER COOLING INSTALLATION

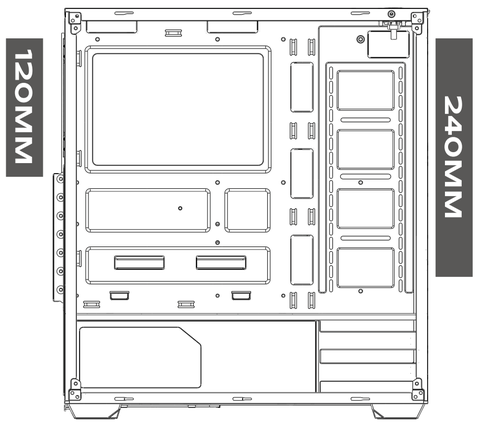

WWW.KRUX.TECH